ENCLO

HIDE IT WITH STYLE

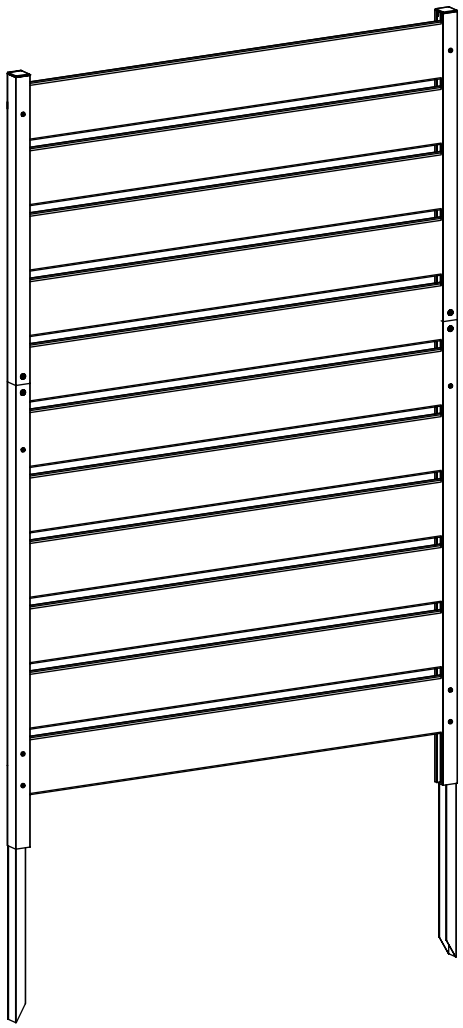

Concord Wood Privacy Screen

60 ½"H X 38 ⅝"W

90 min Assembly
Approximate time

Assembly Video
Scan the QR Code below

ASSEMBLY INSTRUCTIONS

EC18022

www.encloscreens.com

VER. 032423

GENERAL INFORMATION

IMPORTANT

- Check the inside of the larger pieces in your box for other materials packed inside.
- When assembling components, place on a non-abrasive surface (i.e. shipping box) to avoid scratching.
- We recommend an area approximately 5'x 8' for unobstructed assembling.
- You should not need to use excessive force when assembling components.

MISSING OR DAMAGED PARTS?

VISIT OUR WEBSITE FIRST, SO WE CAN HELP YOU RIGHT AWAY!

Although great care has been taken to ensure proper packaging and handling of this product, occasionally problems occur. If you discover any missing, damaged, or defective parts, please visit our website to order replacement parts. If you experience any further trouble with your product, please contact our customer service department.

parts.nychbrands.com

support@encloscreens.com

704-892-5222 / 877-234-6196

Customer service agents are available to take calls weekdays from **9am-5pm EST**. *If you call outside of business hours, please leave a voicemail.*

To help you quickly and accurately, please have reference item number **EC18022** and the specific part name which can be found on page 5. It is helpful if you can provide the batch lot which is a stamped number on the end of the box.

NEED ASSEMBLY HELP?

If you are having problems with the assembly or installation of this product, we are happy to assist you with the process, **so please give us a call at 704-892-5222 / 877-234-6169**

NEED TO RETURN?

If for some reason you need to return this product, please allow us to help resolve your issues first. If you still decide to return the product, **you will need to initiate the return from the company you originally purchased from.**

DETAILED **PRODUCT DIMENSIONS** & **SPECIFICATIONS**

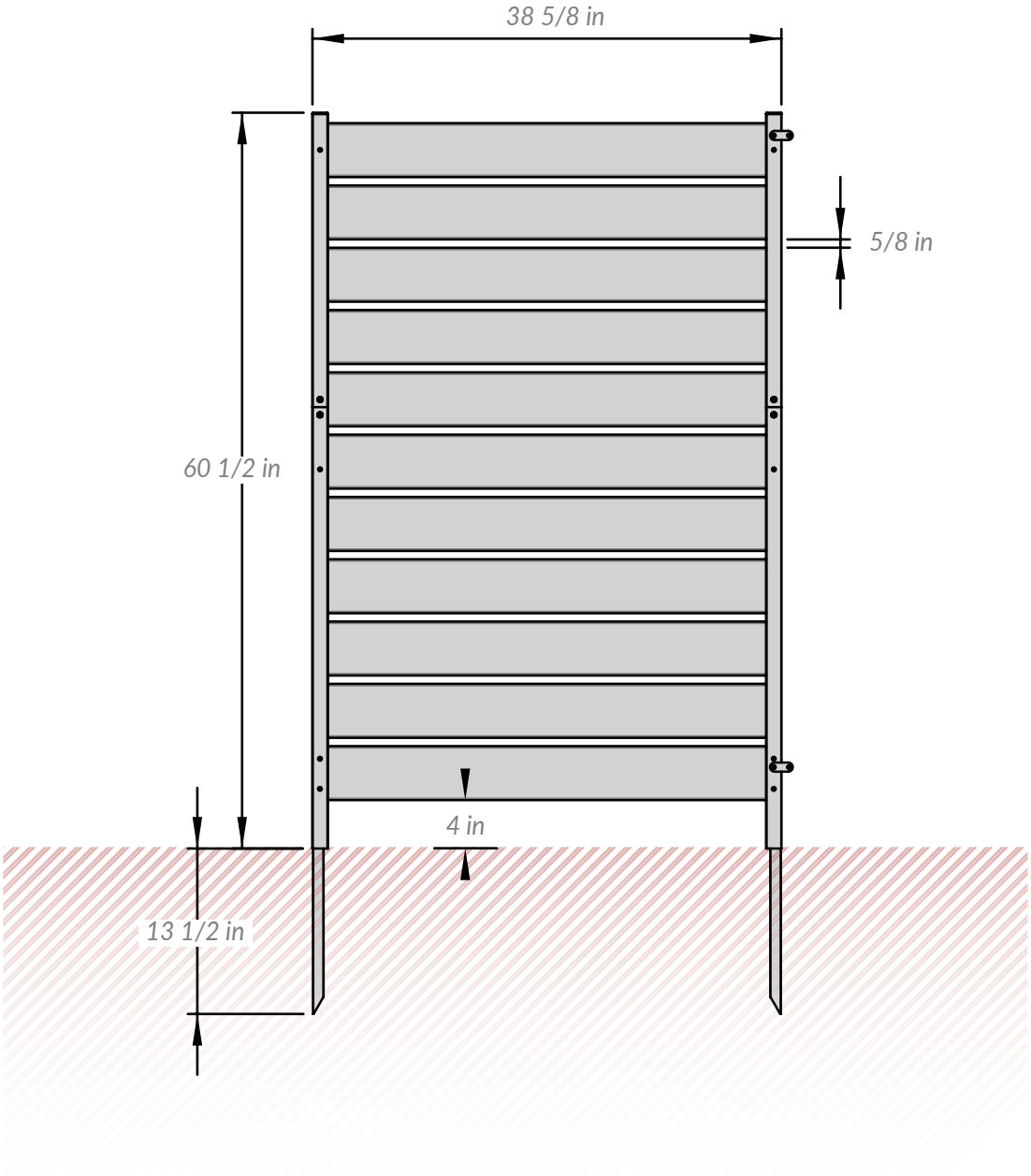

LAY OUT MATERIALS

SMALL PARTS

A

Spacer (18)
⅞" x 1⅛" x ⅝"

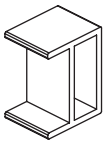

B

Post Bridge (2)
⅞" x 1⅛" x 5½"

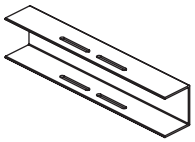

C

Post Cap (2)

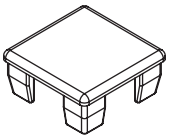

D

Joiner Clip (2)

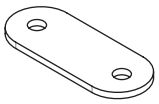

LARGE PARTS

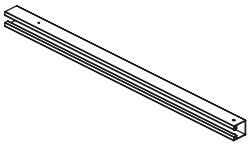

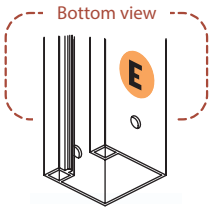

E

Right Post Top (1)
1¼" x 1¼" x 24⅛"

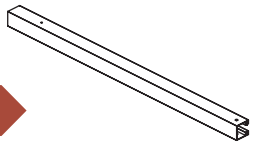

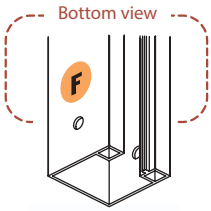

F

Left Post Top (1)
1¼" x 1¼"x 24⅛"

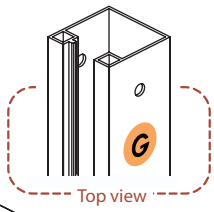

G

Right Post Bottom (1)
1¼" x 1¼" x 36⅜"

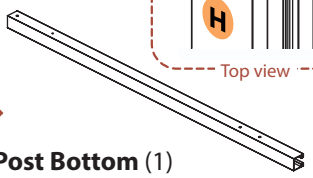

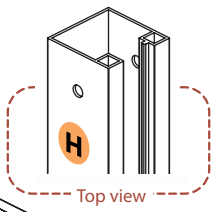

H

Left Post Bottom (1)
1¼" x 1¼" x 36⅜"

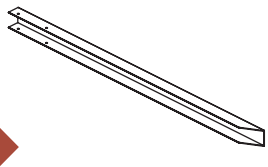

I

Ground Stake (2)
⅞" x 1⅛" x 21½"

WOOD PARTS

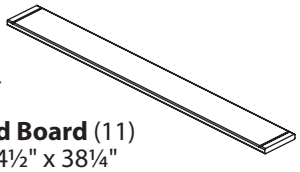

J

Wood Board (11)
⅝" x 4½" x 38¼"

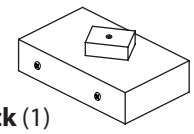

K

Wood Block (1)

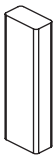

L

Wood Spacer (2)
⅝" x 1¼" x 3⅞"

SCREWS

M

1" **Self-Drilling Stainless Steel Screw** (12)

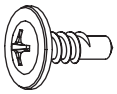

N

½" **Wide Head Stainless Steel Screw** (8)

TOOLS

O

⅛" **Drill Bit** (1)

ASSEMBLING

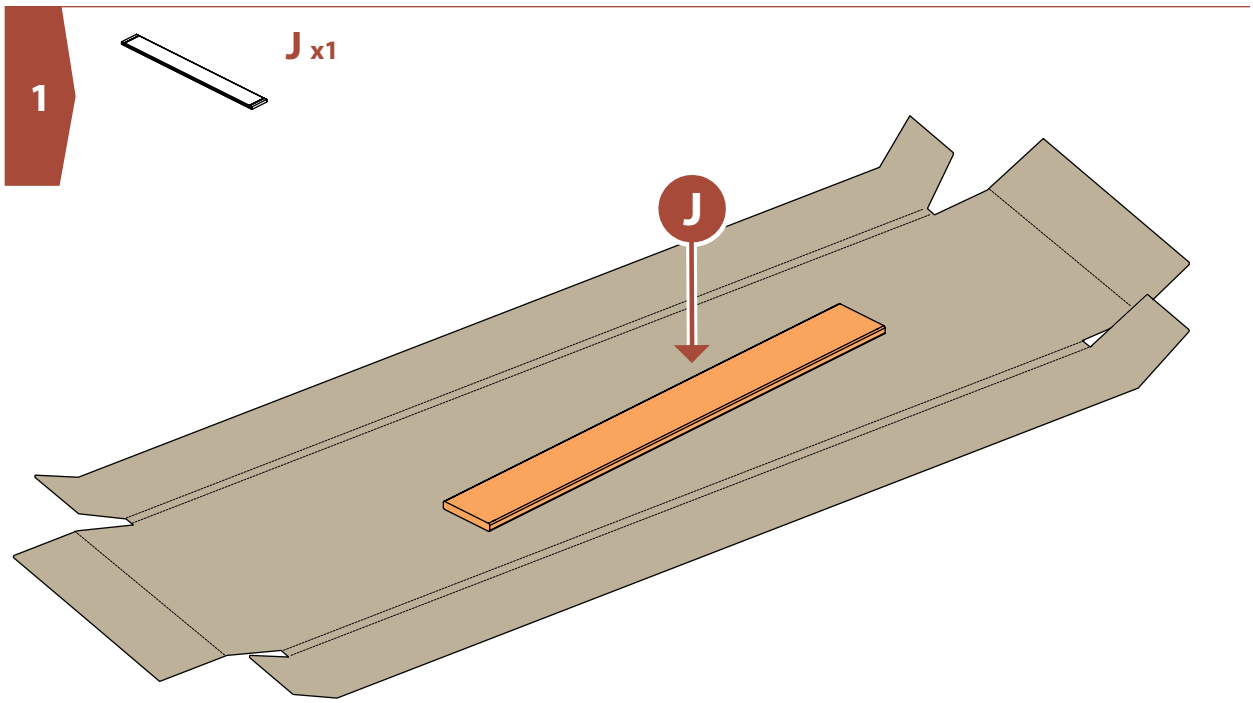

Assemble on box or other smooth surface to prevent scratching

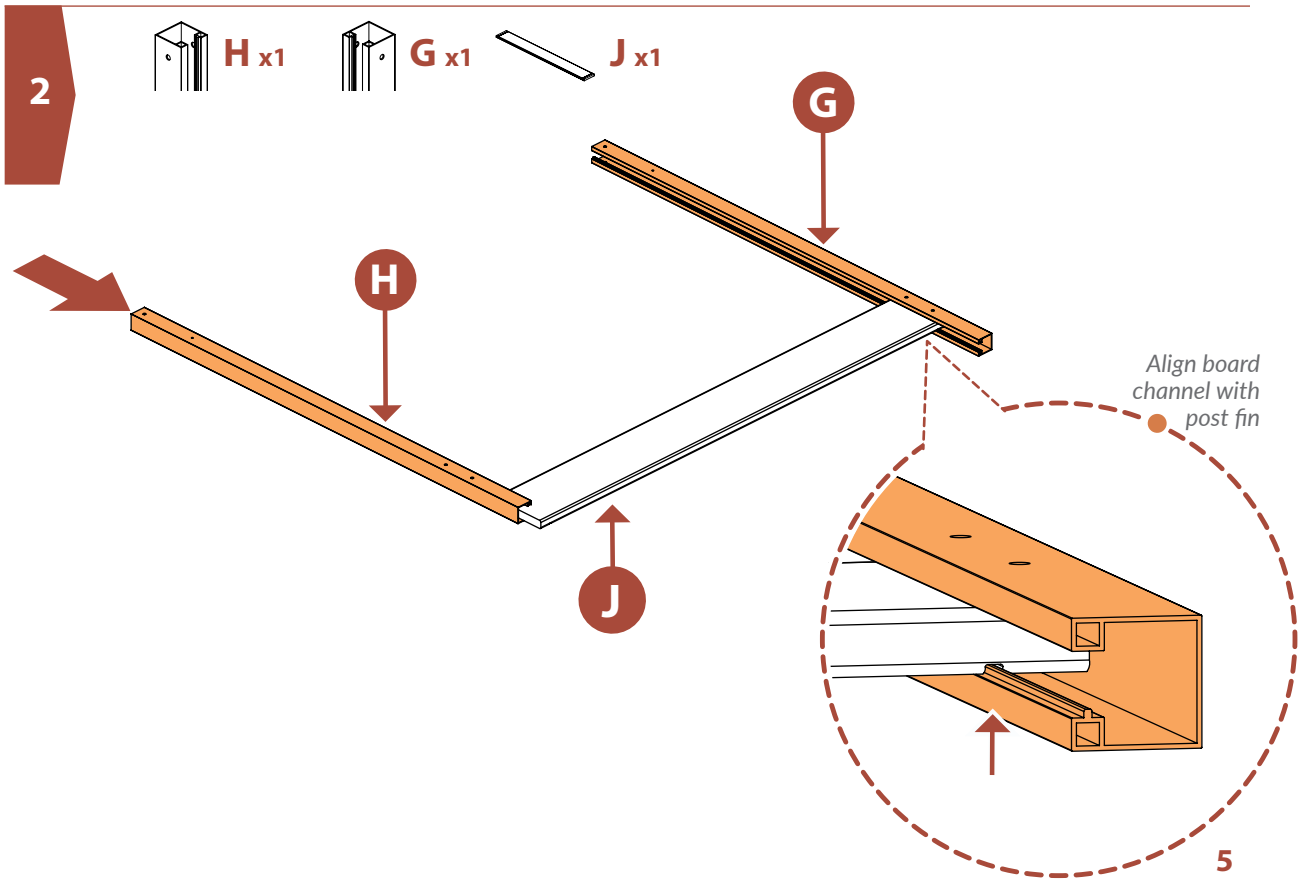

3

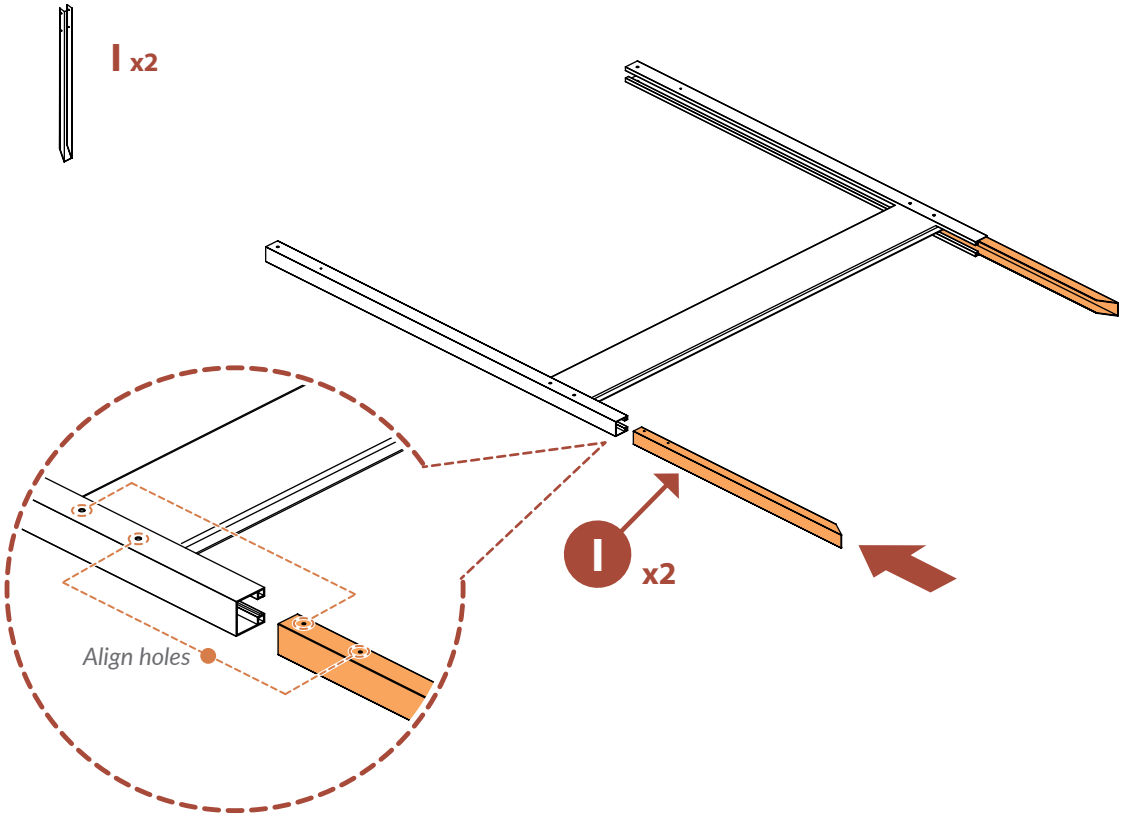
I x2
I x2
Align holes

4

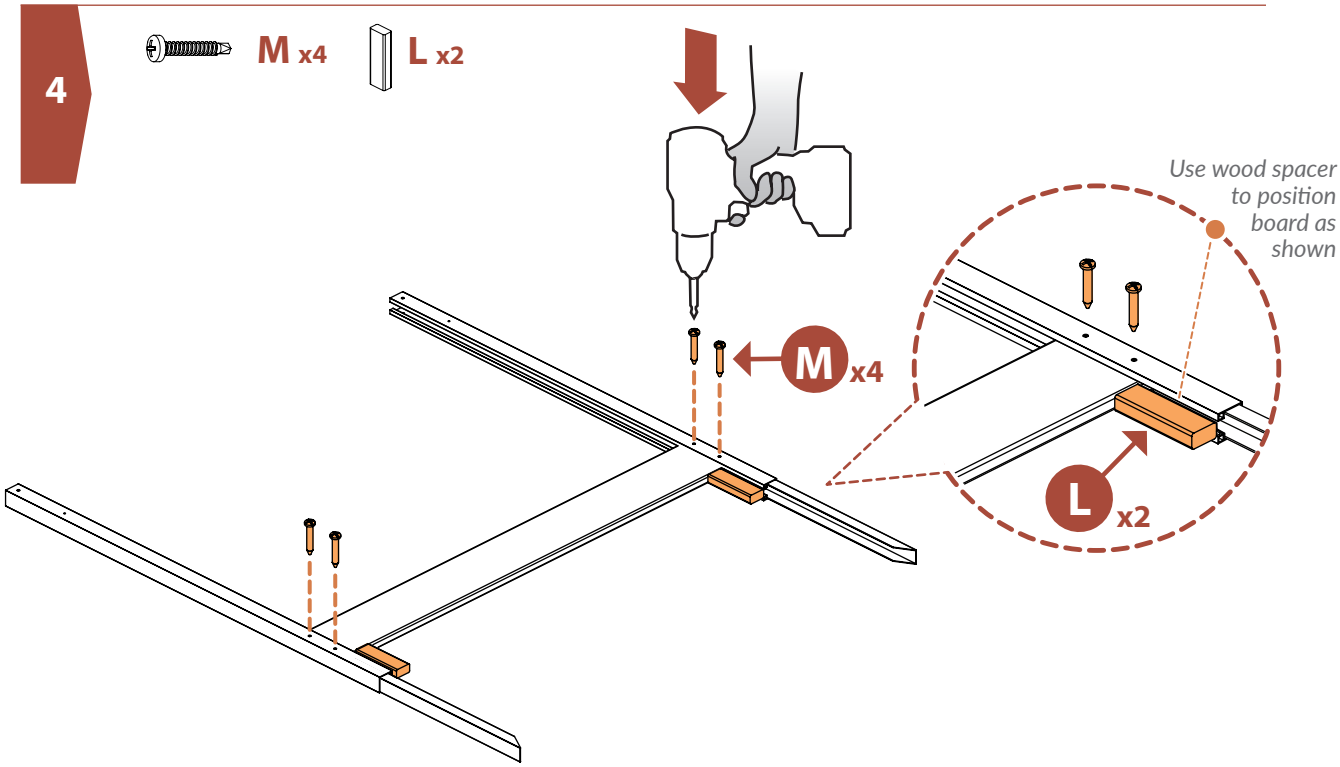
M x4
L x2
M x4
L x2
Use wood spacer to position board as shown

5

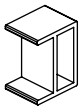

A x2

J x1

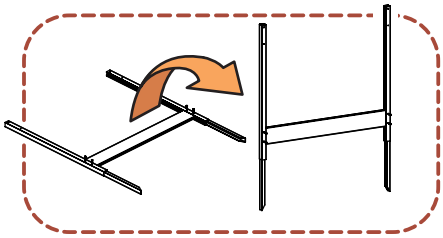

Note: *Lay the panel against a wall for an easier assembly.*

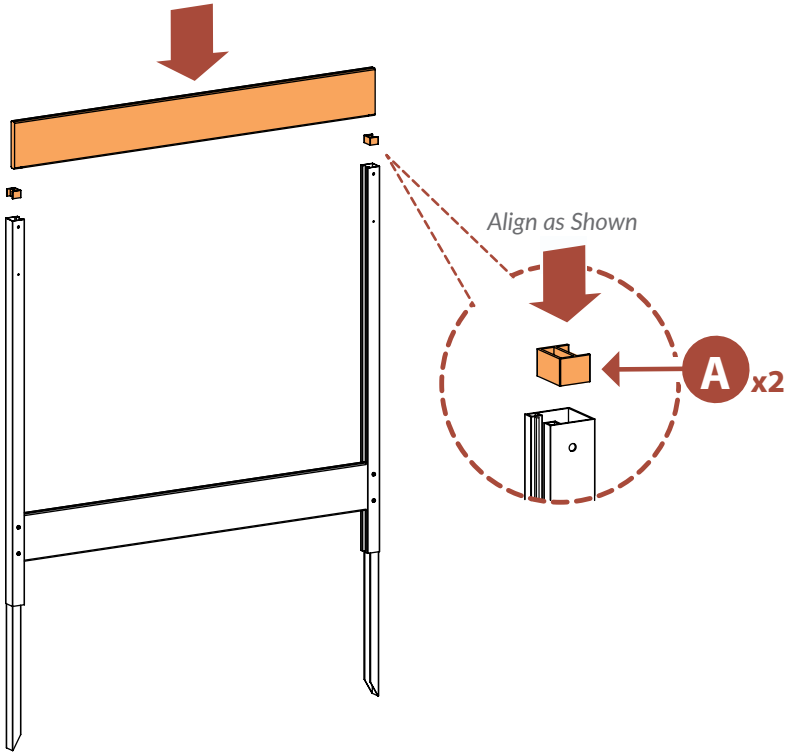

6

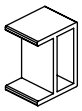

A x8

J x4

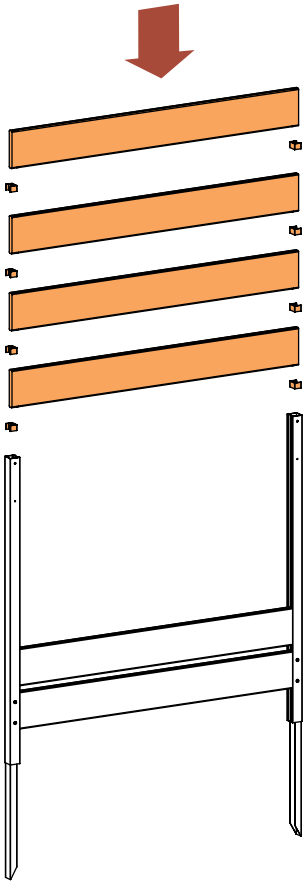

7

M x2

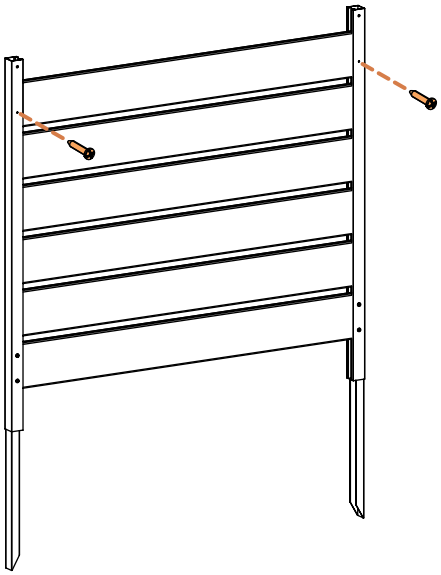

8

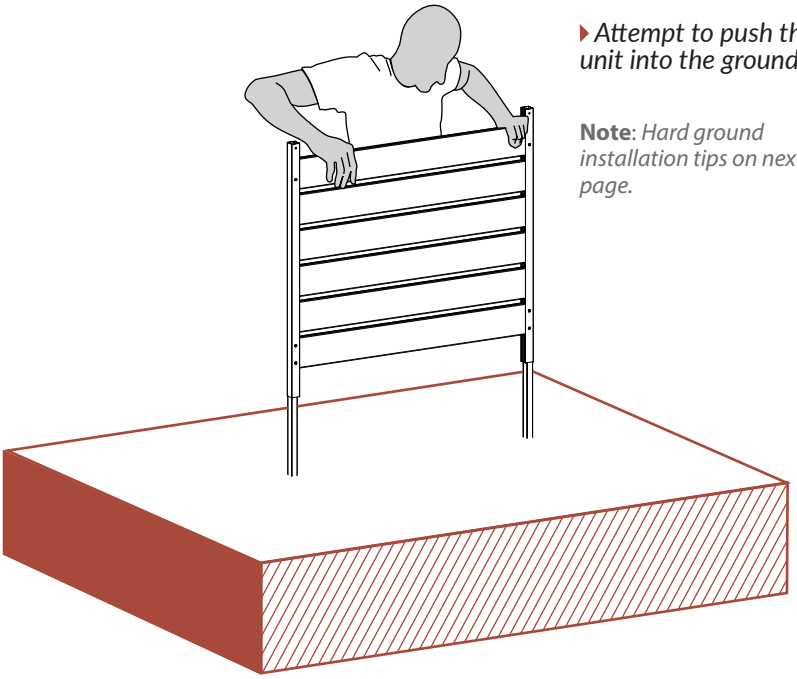

Attempt to push the unit into the ground.

Note: *Hard ground installation tips on next page.*

9

All 13½" of the ground stakes should be inserted into the ground, so that they are no longer visible.

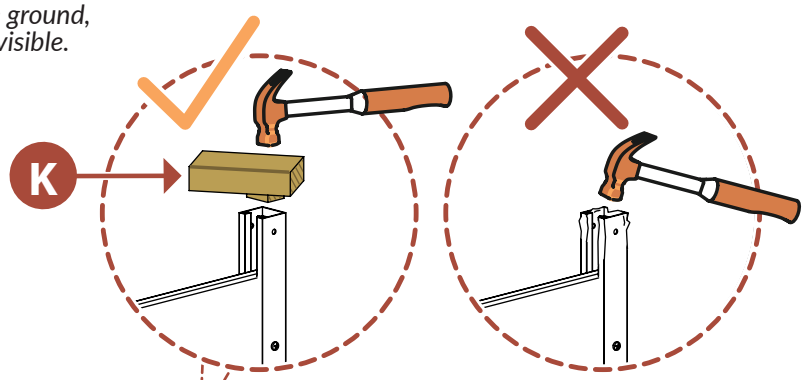

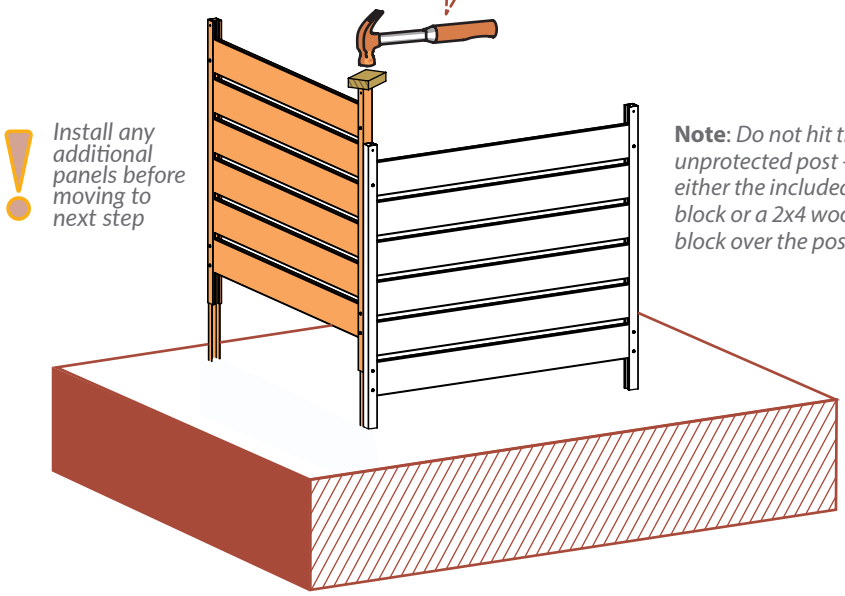

Install any additional panels before moving to next step

Note: *Do not hit the unprotected post - Use either the included wood block or a 2x4 wood block over the post.*

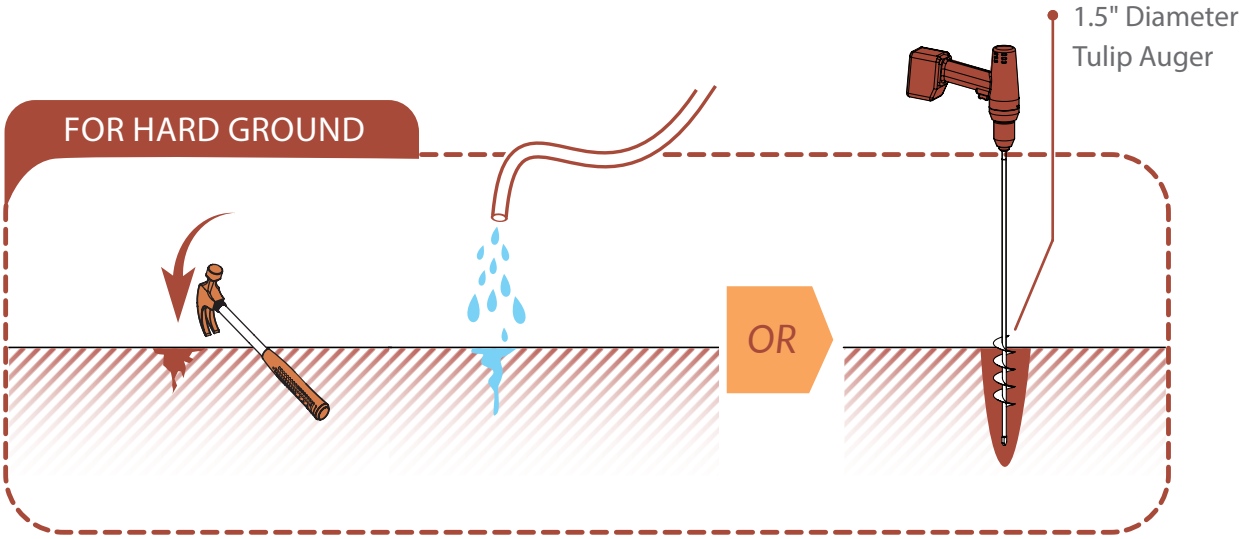

FOR HARDER GROUND

If your ground is really hard, you may need to dig a hole large enough to accommodate one post from each panel - Approximately 8" in diameter and 13" deep. Backfill and compact the dirt.

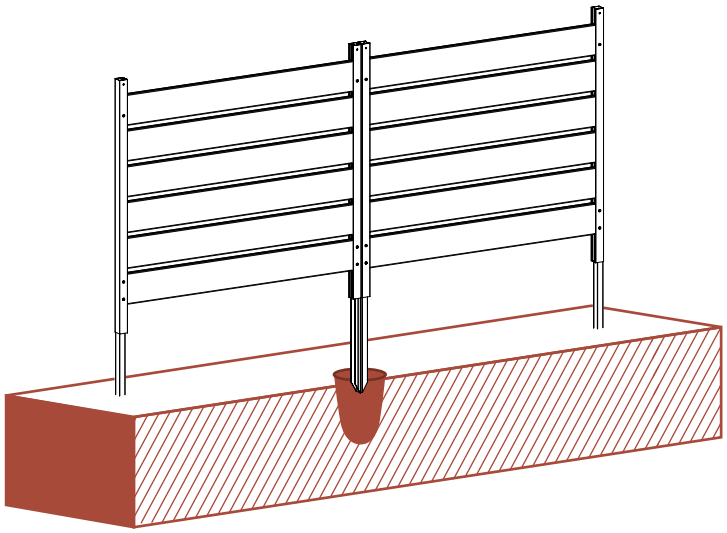

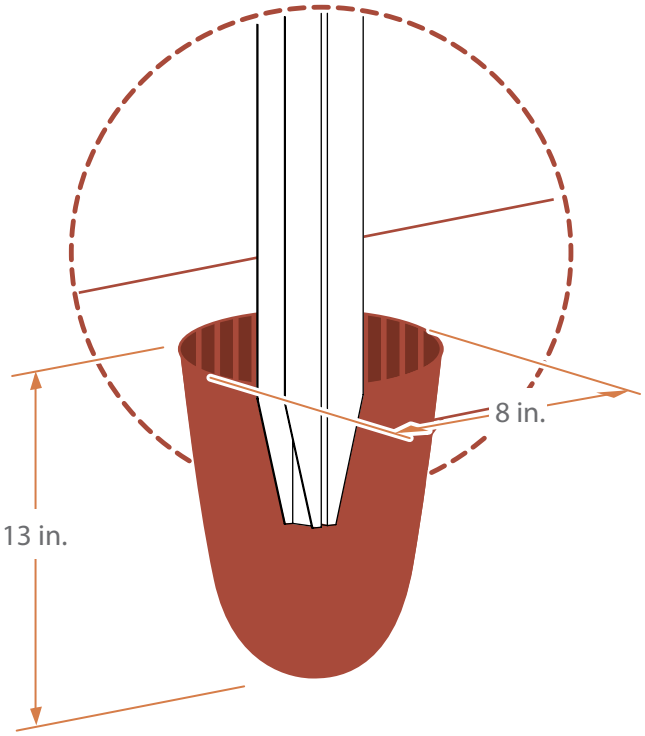

10

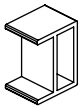

A x2

J x1

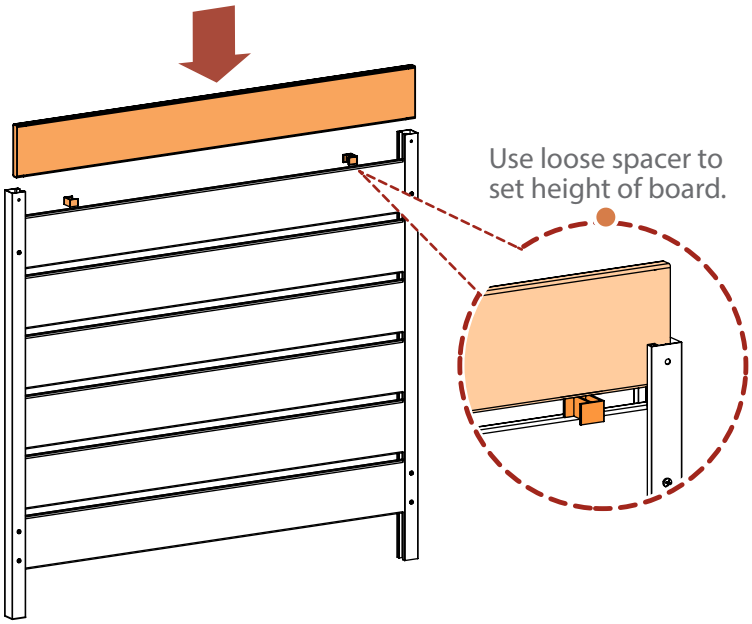

11

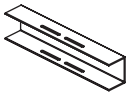

B x2

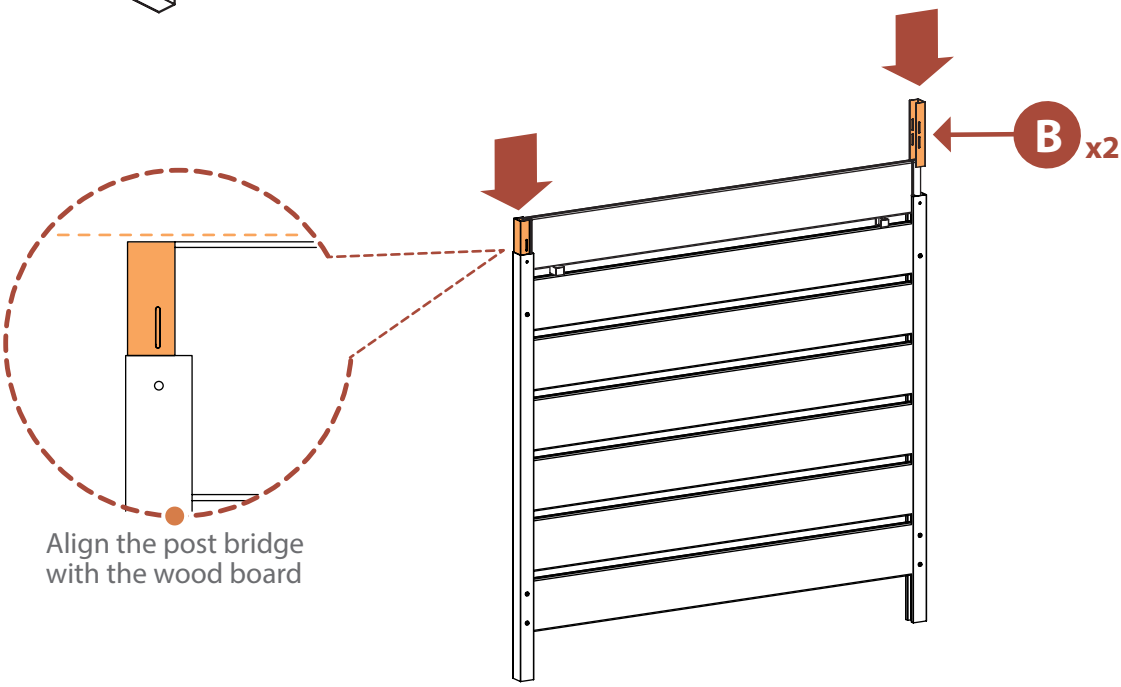

12

N x4

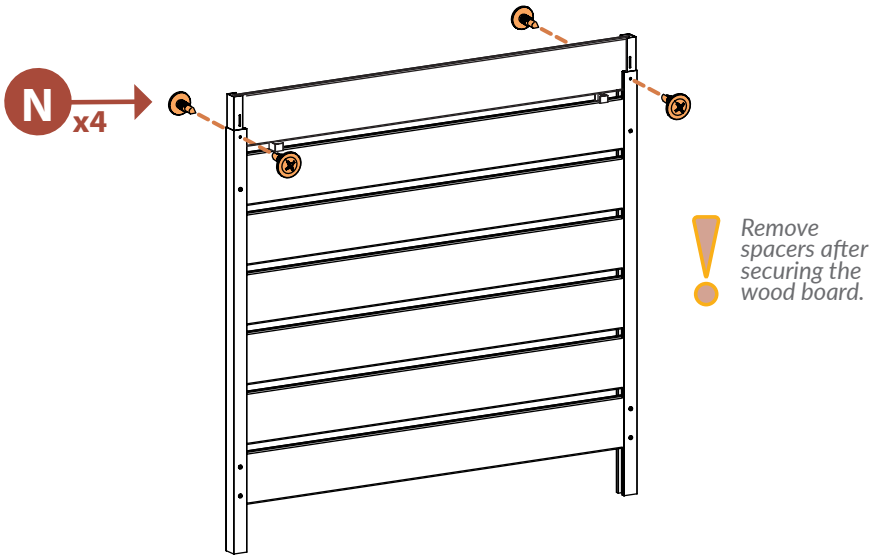

IF HOLE IS BLOCKED

O x1

N x4

If rear hole is blocked, either leave off screw or pre-drill new hole as shown with the included drill bit - part **(O)**.

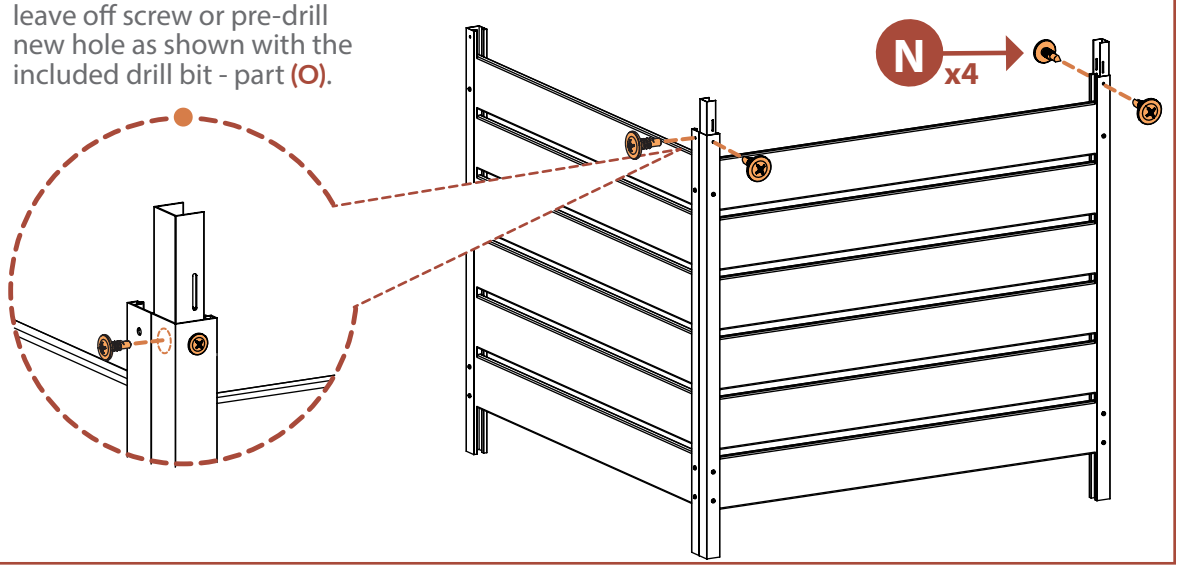

13

F x1

E x1

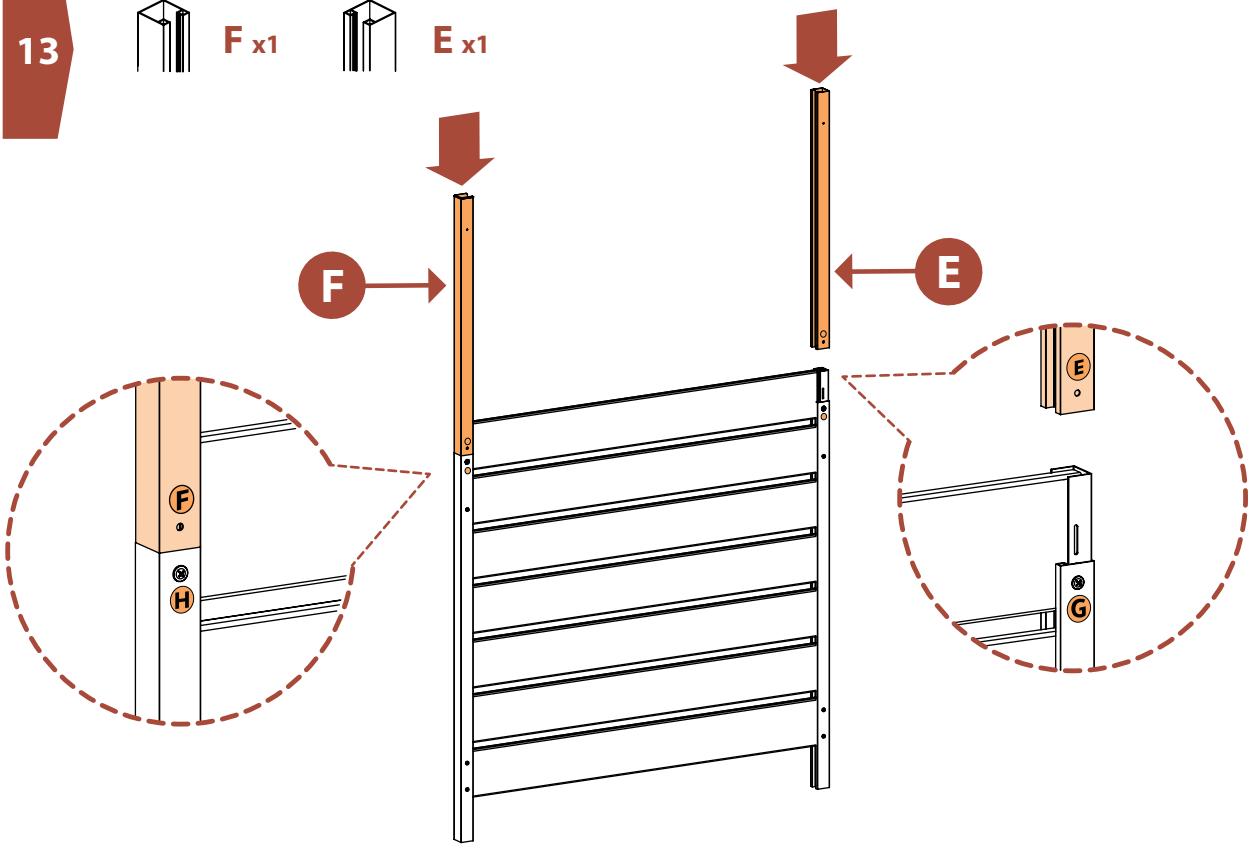

14

N x4

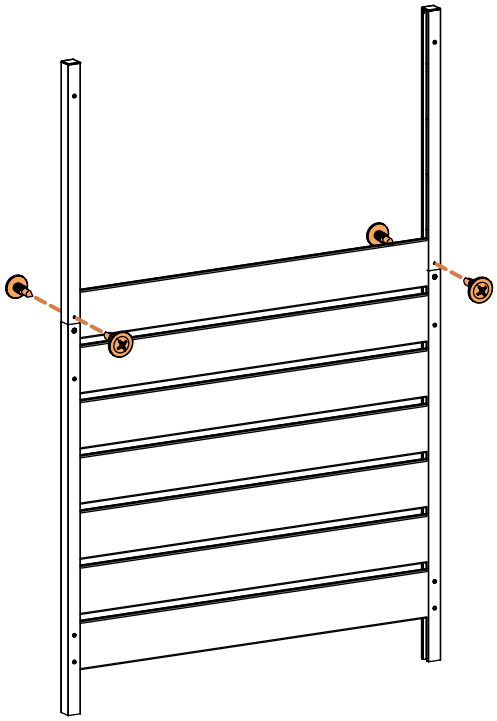

15

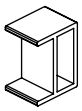

A x8

J x4

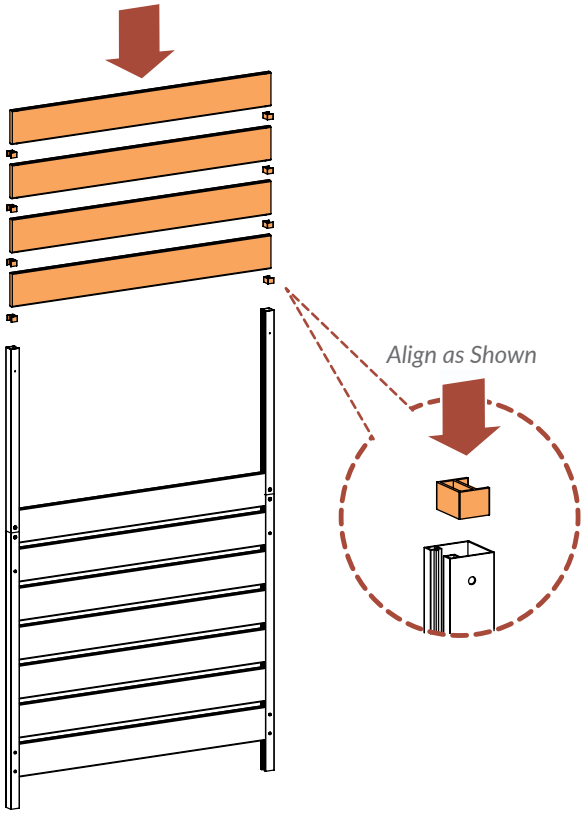

16

M x2

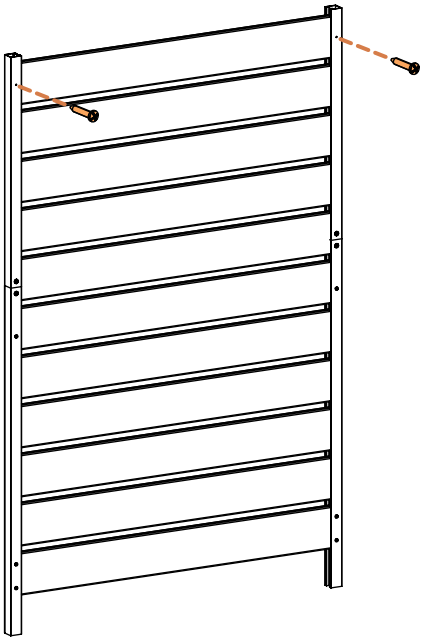

IF INSTALLING MULTIPLE PANELS

M x4 **D** x2 **O** x1

Joiner clip holes do not come pre-drilled to provide flexibility when installing. Drill holes at your chosen locations with the included drill bit - part (O).

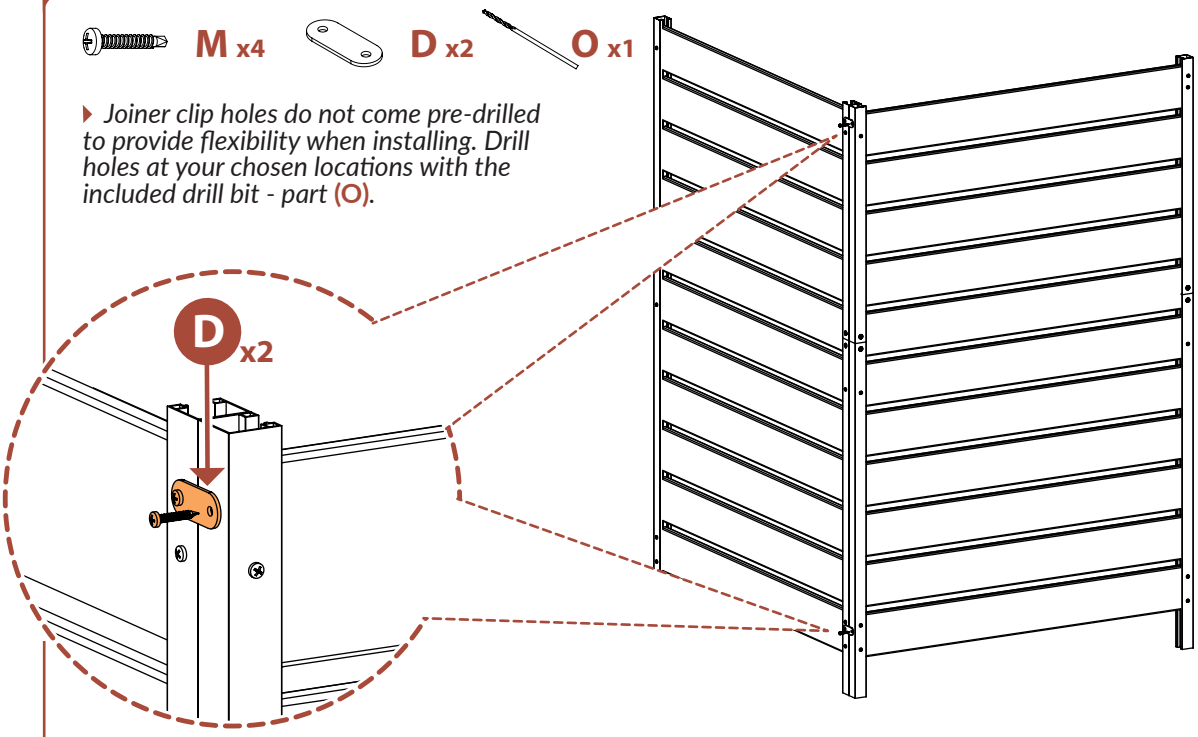

90°

OR

180°

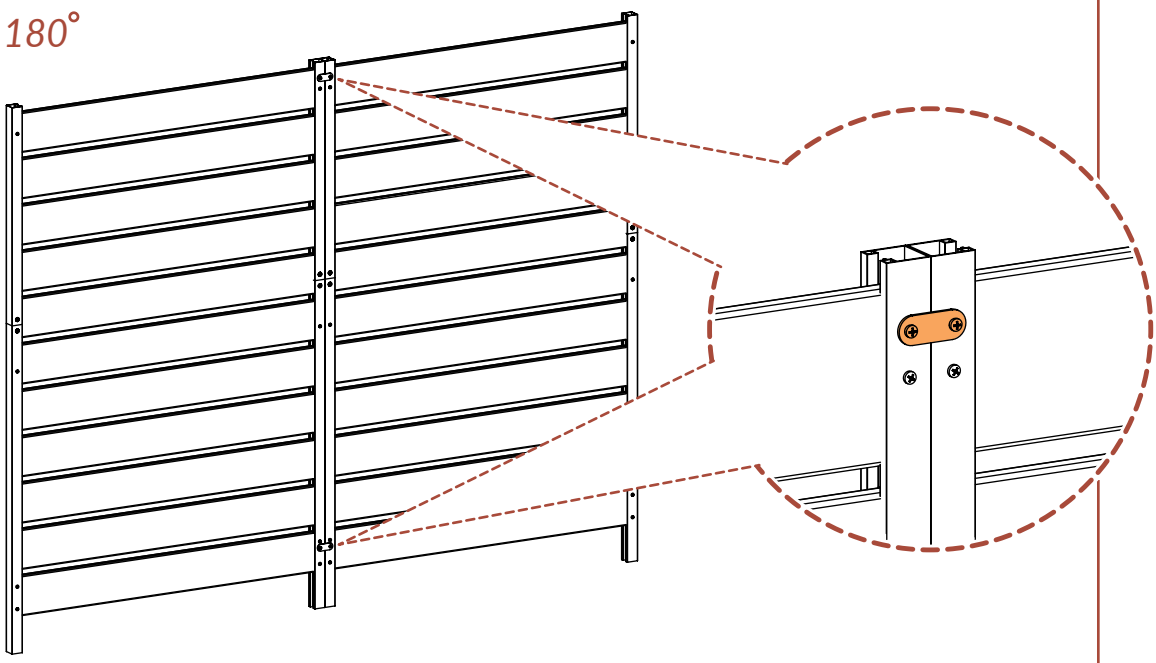

17

C x2

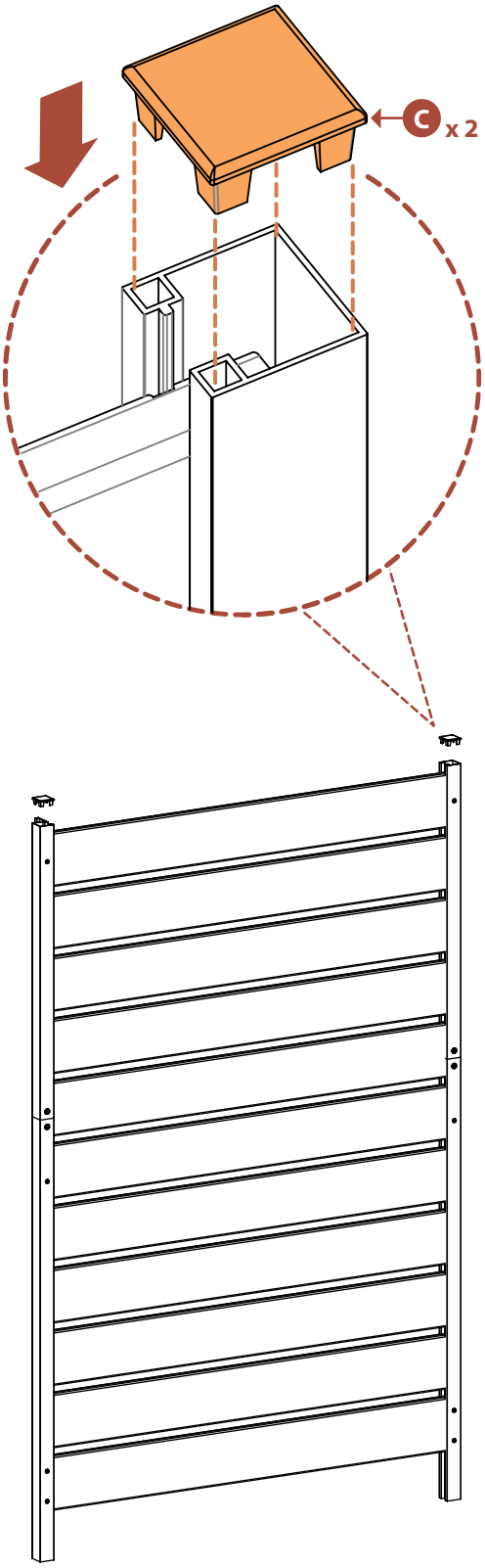

ENCLO

HIDE IT WITH STYLE

www.encloscreens.com

support@encloscreens.com

704-892-5222
877-234-6196

6935 Reames Rd. Ste. K.
Charlotte, NC 28216

ASSEMBLY INSTRUCTIONS

EC18022

VER. **032423**